FORK SAFETY GUIDE

A fork inspection guide designed with safety in mind.

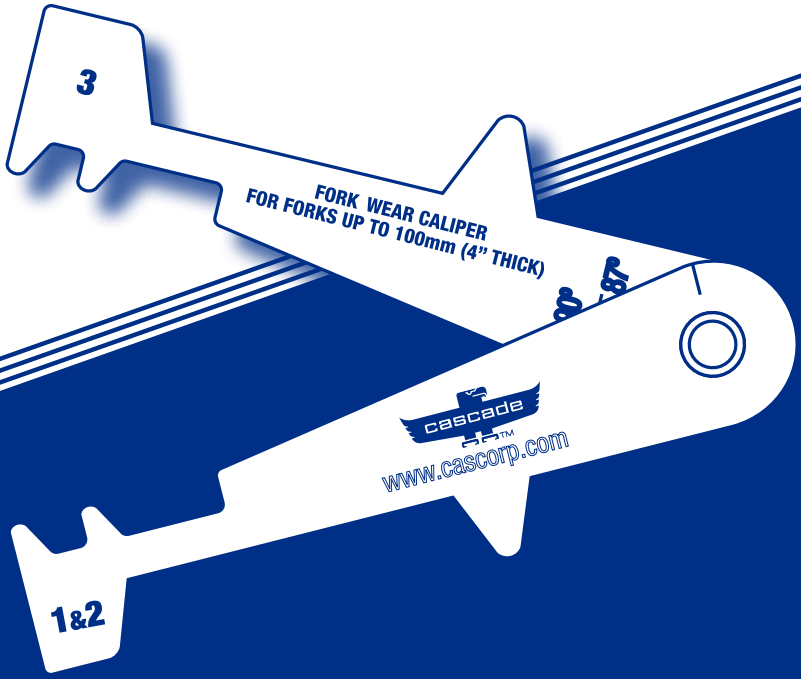

ANSI/ITSDF B56.1

Cascade's Commitment to Workplace Safety

As the global leader in lift truck attachments, forks, accessories and material handling solutions, Cascade recognizes the importance of workplace safety. As a part of our philosophy to promote safety, we have developed this Fork Safety Guide (which includes one Fork Wear Caliper) as a means to promote consistent periodic inspection of forks as part of a comprehensive workplace safety program. Please utilize the information outlined in this guide to ensure components comply with the law and are safe for use.

For additional Fork Safety Guides, Fork Wear Calipers or to inquire about Cascade's extensive line of replacement forks, contact your local Cascade representative or visit www.cascorp.com.

The information provided in this Fork Safety Guide includes language taken direcly from the ANSI/ITSDF B-56.1-2012 SAFETY STANDARD FOR LOW LIFT AND HIGH LIFT TRUCKS (ANSI/ITSDF B56.1). The ANSI/ITSDF B56.1 Standard is copyrighted by the Industrial Truck Standards Development Foundation (ITSDF). All rights are reserved. No part of this Standard may be reproduced, distributed or transmitted in any form or by any means without the prior written consent of ITSDF. For permission requests, write to Industrial Truck Standards Development Foundation, Suite 460, 1750 K Street, Washington, D.C. 20006. Please visit www.ITSDF.org to ensure you have the most recent version.

TABLE OF CONTENTS

Checking Fork Wear

Setting the Fork Wear Caliper 1
Fork Wear Caliper Placement 2
When to Replace Forks 3
Fork Hooks 4
Shaft/Pin Type Forks 5

Checking Fork Damage

Surface Cracks 6
Straightness of Blade and Shank 7
Fork Angle 8
Tip Alignment 9
Positioning Lock 10
Identification Markings 11

Fork Safety Reference Material

Using Your Forks Correctly 12
What Not To Do 13
ANSI/ITSDF B56.1 Safety Standard 14-18

Cascade Genuine Forks

How to Order Replacement and Custom Forks from Cascade 19

CHECKING FORK WEAR

Setting The Fork Wear Caliper:

Set the front teeth of the jaws by measuring the thickness of the shank. Ensure that the caliper is held square across the shank for an accurate reading. The caliper is now set to measure the fork arm blade.

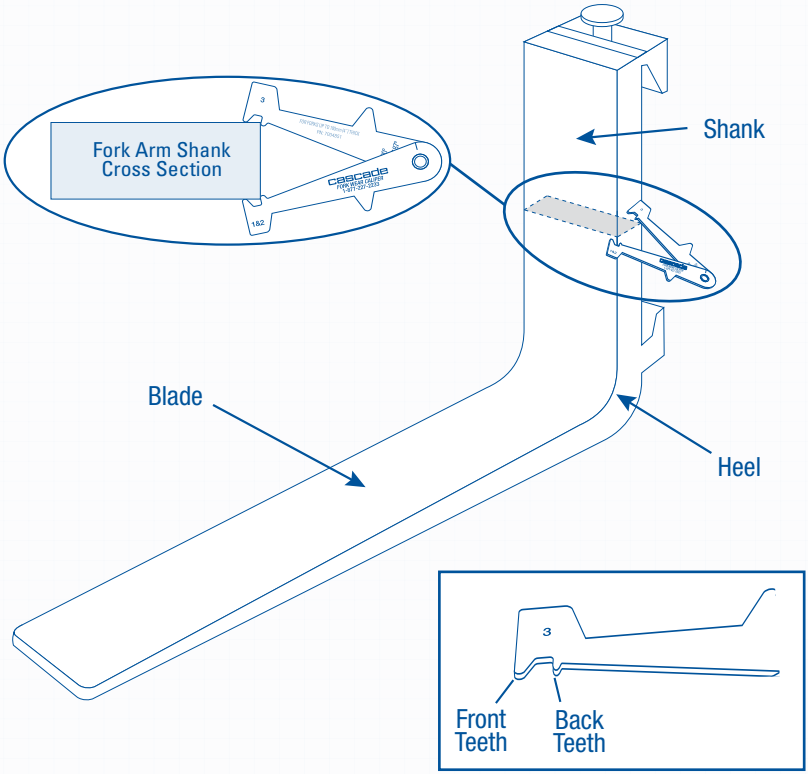

Fork Wear Caliper Placement:

Without changing the caliper setting, position the front teeth of the caliper over the fork arm blade. Ensure the measurement is taken 2" (50 mm) in front of the start of the radius (View A).

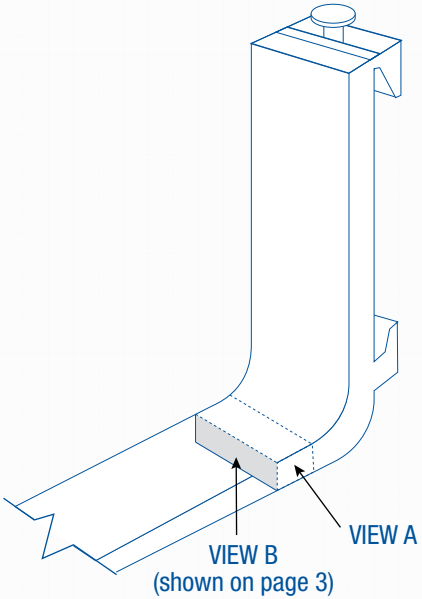

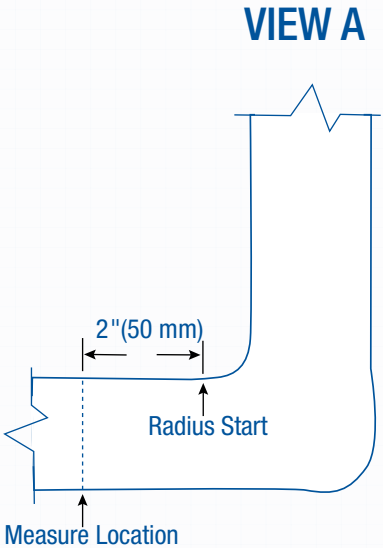

Note: *The enclosed Cascade Fork Wear Caliper can be used on forks up to and including 4" (100 mm) thick. They are* ***NOT TO BE USED ON FULL TAPER OR TWO-STAGE TAPERED FORKS*** *where the shank thickness is greater than that of the blade. In these cases, the blade thickness reduction must be obtained using alternative measuring methods, and you will need to know the original thickness of the fork blade. Contact fork manufacturer to determine if measurements meet design requirements.*

When to Replace Forks:

If any part of the caliper back teeth hit the fork blade, it has less than 10% wear and can remain in service. Refer to View B (as seen on page 2).

OK

Fork Arm Blade Wear Less Than 10%

VIEW B

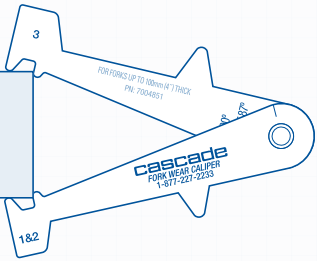

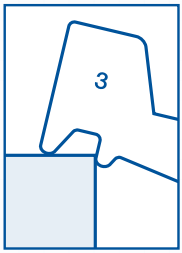

If the back teeth of the caliper pass freely over the fork blade, the fork arm shall be taken out of service. This represents over 10% wear and 20% reduction in strength.

REPLACE

Fork Arm Blade Wear Greater Than 10%

VIEW B

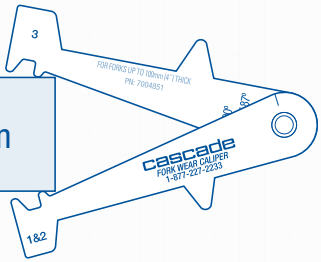

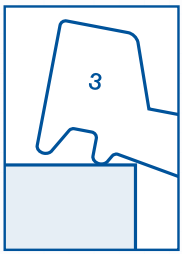

ANSI/ITSDF B56.1 — 6.2.8.1 ***(f) Wear (1)*** *Fork Blade and Shank*. The fork blade and shank shall be thoroughly checked for wear, special attention being paid to the vicinity of the heel. If the thickness is reduced to 90% of the original thickness, the fork shall not be returned to service.

Fork Hooks:

Use the end of the caliper designated for your fork class (Class 1, 2 or 3). With the caliper positioned approximately 3/4" (19mm) in from the side of the hook, slide the caliper into the hook pocket. If the hook lip contacts the back of the caliper (Diagram B), the fork shall be removed from service.

Diagram A (Class 3 Fork)

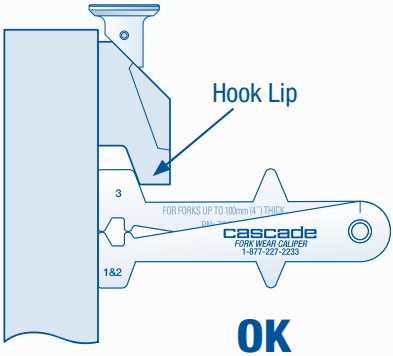

Diagram B (Class 3 Fork)

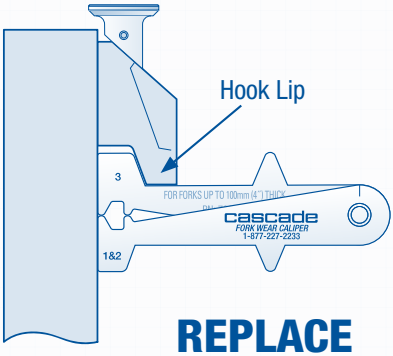

ANSI/ITSDF B56.1 — 6.2.8.1 ***(f) Wear (2)*** *Fork Hooks (When Originally Provided).* The support face of the top hook and the retaining faces of both hooks shall be checked for wear, crushing, and other local deformations. If these are apparent to such an extent that the clearance between the fork and the fork carrier becomes excessive, the fork shall not be returned to service until repaired in accordance with para. 6.2.8.2.

CHECKING FORK WEAR

Shaft/Pin Type Forks:

The Fork Wear Caliper can also be used as inside calipers for measuring the bore or bushing on shaft/pin type forks.

Insert the reversed caliper inside the bore or bushing (see Diagram 1), opening the teeth until both sides of the teeth come in contact with the inside wall of the bore. Pull the caliper out and measure the distance from tip to tip (see Diagram 2). Contact fork manufacturer to determine if measurement meets design requirements.

Diagram 1

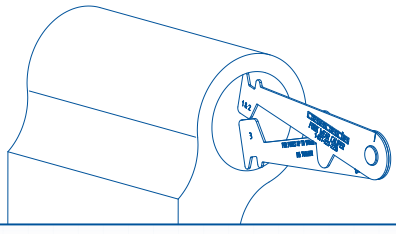

Diagram 2

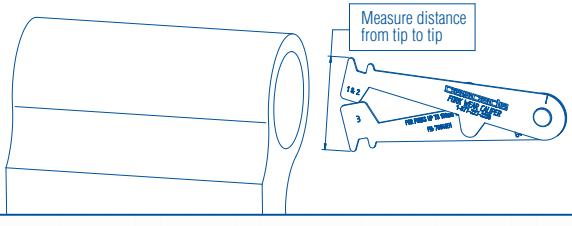

Surface Cracks:

Pay special attention to the fork heel and all welds which attach mounting components to the fork blank. Forks with surface cracks shall not be returned to service.

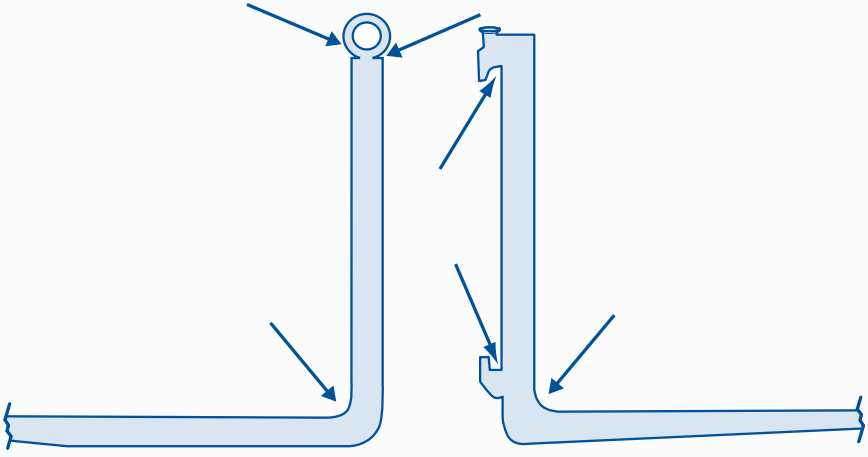

ANSI/ITSDF B56.1 — 6.2.8.1 *(a) Surface Cracks*. The fork shall be thoroughly examined visually for cracks and if considered necessary, subjected to a nondestructive crack detection process, special attention being paid to the heel and welds attaching the mounting components to the fork blank. This inspection for cracks must also include any special mounting mechanisms of the fork blank to the fork carrier including bolt-type mountings and forged upper mounting arrangements for hook or shift-type carriages. The forks shall not be returned to service if surface cracks are detected.

Straightness of Blade and Shank:

Fork shall be removed from service if the deviation from straightness exceeds allowable “A” and “B” values.

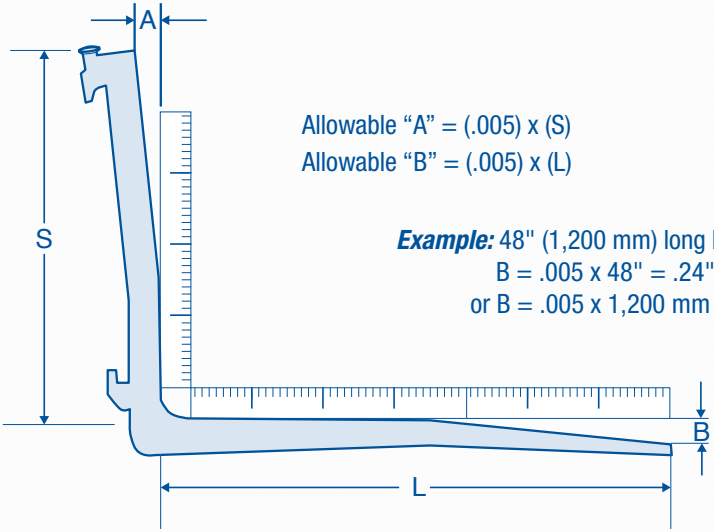

Allowable “A” = (.005) x (S)
Allowable “B” = (.005) x (L)

Example: 48" (1,200 mm) long blade
B = .005 x 48" = .24"
or B = .005 x 1,200 mm = 6.0 mm

ANSI/ITSDF B56.1 — 6.2.8.1 (*b*) *Straightness of Blade and Shank*. The straightness of the upper face of the blade and the front face of the shank shall be checked. If the deviation from straightness exceeds 0.5% of the length of the blade and/or height of the shank, respectively, the fork shall not be returned to service until it has been repaired in accordance with para 6.2.8.2.

Fork Angle:

If the blade to shank angle exceeds allowable values of 3º, the fork shall be removed from service.

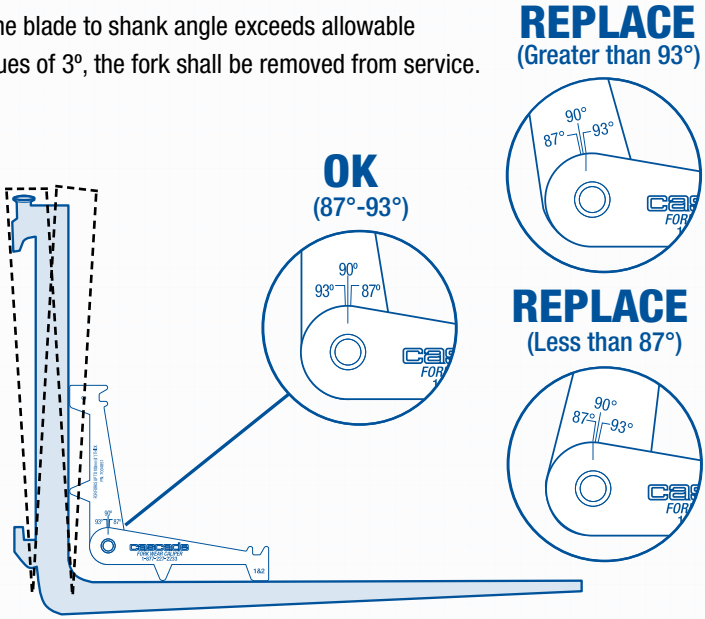

ANSI/ITSDF B56.1 — 6.2.8.1 ***(c)*** *Fork Angle (Upper Face of Blade to Load Face of the Shank)*. Any fork that has a deviation of greater than 3 deg from the original specification shall not be returned to service. The rejected fork shall be reset and tested in accordance with para 6.2.8.2.

Tip Alignment:

When the difference in height of the tips of a pair of forks on the same carriage exceeds 3% of the forks blade length (L), then the forks shall be removed from service.

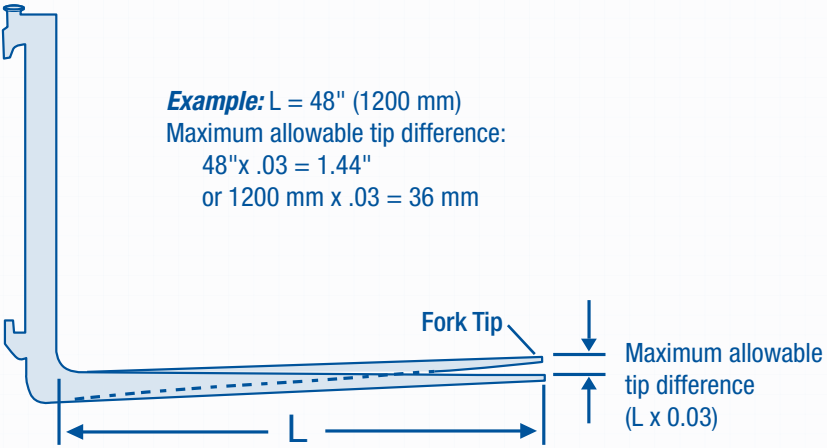

ANSI/ITSDF B56.1 — 6.2.8.1 ***(d)*** *Difference in Height of Fork Tips.* The difference in height of one set of forks when mounted on the fork carrier shall be checked. If the difference in tip heights exceeds 3% of the length of the blade, the set of forks shall not be returned to service until repaired in accordance with para 6.2.8.2.

Positioning Lock:

Check the positioning lock and other fork retention devices to ensure they are in place and in correct working order. If the Positioning Lock is missing or non-operational, the fork shall be removed from service.

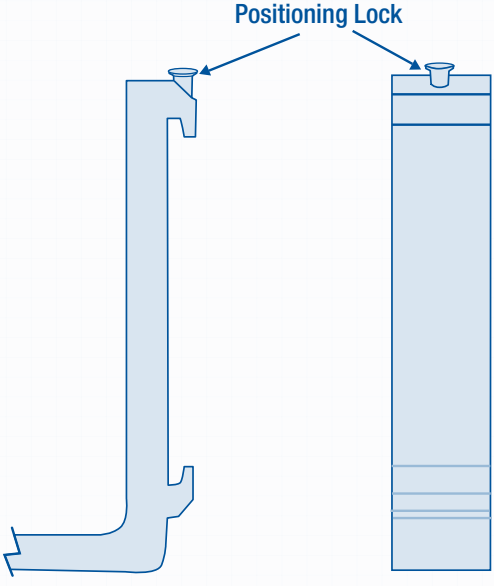

ANSI/ITSDF B56.1 — 6.2.8.1 ***(e)*** *Positioning Lock (When Originally Provided).* It shall be confirmed that the positioning lock is in good repair and correct working order. If any fault is found, the fork shall be withdrawn from service until satisfactory repairs have been effected.

Identification Markings:

If the fork identification marking is not clearly legible, it shall be removed from service.

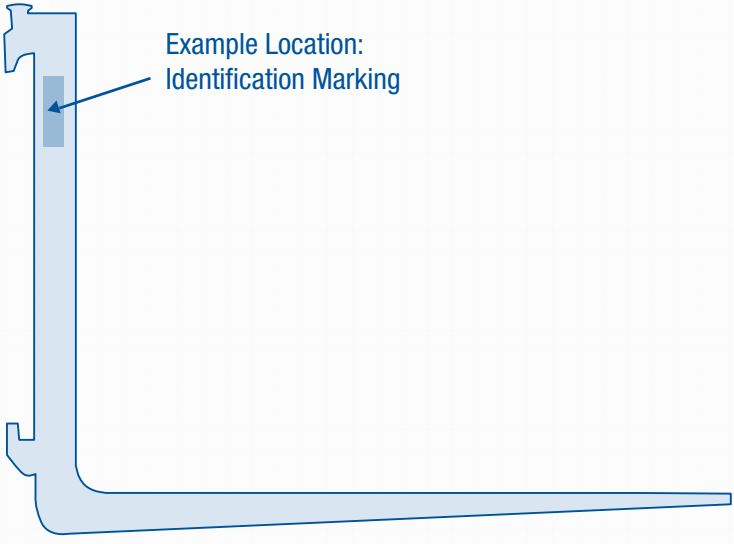

ANSI/ITSDF B56.1 — 6.2.8.1 ***(g)*** *Legibility of Marking (When Originally Provided).* If the fork marking in accordance with para 7.27.2 is not clearly legible, it shall be renewed. Marking shall be renewed per instructions from original supplier.

Using Your Forks Correctly:

Forks last a long time if treated properly, however it can be difficult to see when they are worn or damaged. Utilizing the material provided in this Fork Safety Guide, along with the following points, can help minimize issues associated with fork wear.

- Forks shall be examined for wear, damage or any other defects at least daily or after after each shift for round-the-clock operations. Any issues found shall be immediately reported and corrected.
- All positioning locks must be in place at all times. Forks must be properly seated on the carriage and the positioning locks fully engaged in the slot before use.
- Make sure loads are seated securely against the rear fork shank and load backrest.
- Make sure the fork capacity meets or exceeds lift truck capacity and load center rating as identified on lift truck capacity/nameplate.
- Determine fork wear cycle and establish a fork replacement schedule for your operation.
- Always contact fork manufacturer to obtain written approval PRIOR to making any fork modifications and/or repairs.
- Though drum clamps and portable booms can be supported on forks, be aware of what is contained in the drum or the boom hook.
- If a collision with a building beam, wall or other object occurs (even if the forks show no discernible damage), thoroughly inspect the forks for any slight bends or damage which may impact safety.
- Always destroy worn or damaged forks so they are not mistakenly re-used.

What Not to Do:

Forks that are mistreated or neglected can become a detriment to a safe working enviroment. The following are some recommendations of what to avoid so forks are not damaged in the course of daily work.

- **DO NOT** perform any modifications or alterations to a powered industrial truck that may affect the capacity, stability or safe operation of the truck without the prior written approval of the original truck manufacturer or its successor thereof.
- **DO NOT** overload forks by picking up a load too far out on the forks.
- **DO NOT** pick up loads heavier than the lift truck rating.
- **DO NOT** pick up off-balanced loads far from the side of the lift truck.
- **DO NOT** overload the fork beyond its rated capacity.
- **DO NOT** change forks from one lift truck to another without knowing capacities of each truck and fork.
- **DO NOT** use a fork in an application for which it is not designed.
- **DO NOT** add a fork extension longer than 150% of the supporting fork's length.
- **DO NOT** allow maintenance shops to bend forks back into shape.
- **DO NOT** weld on forks as welding destroys a fork's heat treat properties and diminishes the fork strength.
- **DO NOT** drill holes in forks or grind on forks.
- **DO NOT** lift or carry any loads using one fork.
- **DO NOT** apply sideways pressure to forks, commonly called "side loading", as they are designed for vertical loading only.
- **DO NOT** install unapproved attachments or devices which may add stress to the forks.
- **DO NOT** use forks to open rail car doors.
- **DO NOT** use forks to break loads out/away from other loads.
- **DO NOT** insert the fork tips under other lift trucks to lift them during maintenance operations.
- **DO NOT** apply heat to any part of fork for any reason.
- **DO NOT** overlook fork hooks during your periodic fork inspection.

The following information provided has been taken directly from the ANSI/ITSDF B56.1 Safety Standard for Low Lift and High Lift Trucks. The ANSI/ITSDF B56.1 Standard is copyrighted by the Industrial Truck Standards Development Foundation (ITSDF). All rights are reserved. No part of this Standard may be reproduced, distributed or transmitted in any form or by any means without the prior written consent of ITSDF. For permission requests, write to Industrial Truck Standards Development Foundation, Suite 460, 1750 K Street, Washington, D.C. 20006. Please visit www.ITSDF.org to ensure you have the most recent version.

ANSI/ITSDF B56.1 Safety Standard for Low Lift and High Lift Trucks:

6.2.8 Inspection and Repair of Forks in Service on Fork Lift Trucks

(a) Forks in use shall be inspected at intervals of not more than 12 months (for single shift operations) or whenever any defect or permanent deformation is detected. Severe applications will require more frequent inspection.

(b) Individual Load Rating of Forks. When forks are used in pairs (the normal arrangement), the rated capacity of each fork shall be at least half of the manufacturer's rated capacity of the truck, and at the rated load center distance shown on the lift truck nameplate.

ANSI/ITSDF B56.1 Safety Standard for Low Lift and High Lift Trucks (cont'd):

6.2.8.1 Inspection. Fork inspection should be carried out carefully by trained personnel with the aim of detecting any damage, failure, deformation, etc., which might impair safe use. Any fork that shows such a defect must be withdrawn from service, and shall not be returned to service unless it has been satisfactorily repaired in accordance with para. 6.2.8.2.

(a) Surface Cracks. The fork shall be thoroughly examined visually for cracks and if considered necessary, subjected to a non-destructive crack detection process, special attention being paid to the heel and welds attaching the mounting components to the fork blank. This inspection for cracks must also include any special mounting mechanisms of the fork blank to the fork carrier including bolt-type mountings and forged upper mounting arrangements for hook or shaft-type carriages. The forks shall not be returned to service if surface cracks are detected.

(b) Straightness of Blade and Shank. The straightness of the upper face of the blade and the front face of the shank shall be checked. If the deviation from straightness exceeds 0.5% of the length of the blade and/or the height of the shank, respectively, the fork must not be returned to service until it has been repaired in accordance with para. 6.2.8.2.

(c) Fork Angle (Upper Face of Blade to Load Face of the Shank). Any fork that has a deviation of greater than 3 deg from the original specification shall not be returned to service. The rejected fork shall be reset and tested in accordance with para. 6.2.8.2.

ANSI/ITSDF B56.1 Safety Standard for Low Lift and High Lift Trucks (cont'd):

(d) Difference in Height of Fork Tips. The difference in height of one set of forks when mounted on the fork carrier shall be checked. If the difference in tip heights exceeds 3% of the length of the blade, the set of forks shall not be returned to service until repaired in accordance with para. 6.2.8.2.

(e) Positioning Lock (When Originally Provided). It shall be confirmed that the positioning lock is in good repair and correct working order. If any fault is found, the fork shall be withdrawn from service until satisfactory repairs have been effected.

(f) Wear (1) Fork Blade and Shank. The fork blade and shank shall be thoroughly checked for wear, special attention being paid to the vicinity of the heel. If the thickness is reduced to 90% of its original thickness, the fork shall not be returned to service.

(2) Fork Hooks (Where Originally Provided). The support face of the top hook and the retaining faces of both hooks shall be checked for wear, crushing and other local deformations. If these are apparent to such an extent that the clearance between the fork and the fork carrier becomes excessive, the fork shall not be returned to service until repaired in accordance with para. 6.2.8.2.

(g) Legibility of Marking (When Originally Provided). If the fork marking in accordance with para. 7.27.2 is not clearly legible, it shall be renewed. Marking shall be renewed per instructions from original supplier.

ANSI/ITSDF B56.1 Safety Standard for Low Lift and High Lift Trucks (cont'd):

6.2.8.2 Repair and Testing

(a) Repair. Only the manufacturer of the fork, or an expert of equal competence, shall decide if a fork may be repaired for continued use, and repairs shall only be carried out by such parties. It is not recommended that surface cracks or wear be repaired by welding. When repairs necessitating resetting are required, the fork shall subsequently be subjected to an appropriate heat treatment, as necessary.

(b) Test Loading. A fork that has undergone repairs, other than repair or replacement of the positioning lock and/or the marking, shall only be returned to service after being submitted to, and passing, the tests described in para 7.27.3, except that the test load shall correspond to 2.5 times the rated capacity marked on the fork.

ANSI/ITSDF B56.1 Safety Standard for Low Lift and High Lift Trucks (cont'd):

7.27 Forks

7.27.1 Forks shall be designed to avoid unintentional unhooking and/or excessive lateral movement.

7.27.2 Each fork shall be clearly stamped with its individual load rating in an area readily visible and not subject to wear; e.g, 2,000 x 600, meaning 2,000kg load rating at 600mm load center.

7.27.3 Fork strength shall permit the following loading and method of test.
(a) The test load *F* shall correspond to three times the load rating of the fork arm and shall be applied to it at the applicable distance *D* from the front face of the fork arm shank.
(b) The fork arm shall be restrained in a manner identical to that used on the forklift truck.
(c) The test load shall be applied twice, gradually and without shock, and maintained for 30 sec. each time.
(d) The fork arm shall be checked before and after the second application of the test load. It shall not show any permanent deformation.

Your Fork Experts

- Locations all over the world provide the fastest lead times.
- We source the highest quality steel for long life and durability.
- Over 150 standard fork sizes for immediate delivery.
- Custom designs in any size.
- Manufactured according to latest industry safety standards.

Portland, OR
800 CASCADE

Brescia, Italy
0039 (0)30 26 29 541

Hebei, China
+86 318-433-5600

Guelph, Ontario
877 CASCADE

Ancenis, France
00-33-(0)2-40-98-98-30

Hyogo, Japan
+81-6-6420-9771

Manchester, UK
0044 (0) 161 4384010

Darra, Australia
1-800-227-223

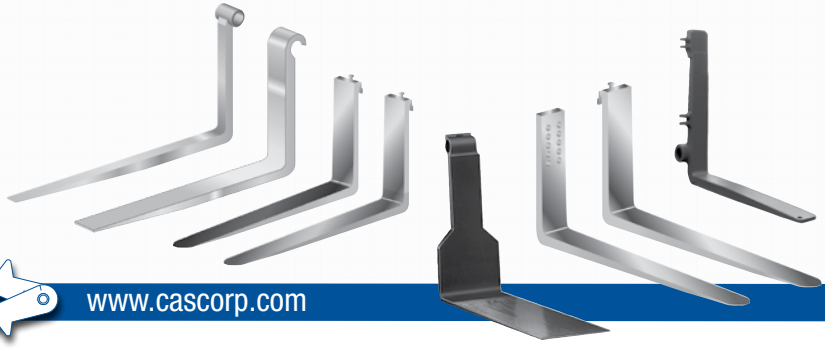

enclosed:
< CASCADE CALIPER >

For additional Fork Safety Guides, Fork Wear Calipers or to inquire about Cascade's extensive line of replacement forks, contact your local Cascade representative or visit www.cascorp.com.

Cascade World Headquarters
P.O. Box 20187
Portland, OR 97204
800-CASCADE (227-2233)

Cascade Canada, Ltd.
P.O. Box 1508
Guelph, Ontario N1H 6N9 - Canada
877 CASCADE (227-2233)

Cascade European Headquarters
Cascade Italia S.r.l.
Via Dell'Artigianato 1
37030 Vago di Lavagno (VR), Italy
+39-045-8989111

www.cascorp.com

Cascade is a registered trademark of Cascade Corporation.
© Cascade Corporation 2016. All rights reserved.
Form 6842299R2_EN_ANSI 3000 C2 02/16